Section-I: General Aptitude

1. The values of x which satisfy $(x-1)(x)(x+1) \le 0$ is / are

   i. $x \le 0$; ii. $x \le -1$ iii. $0 \le x \le 1$

   (A) Only I (B) Both ii and iii (C) Both i and ii (D) Both i and iii

2. A company awarded annual bonuses to its employees. Of the employees at the company, 70% received bonuses of at least 10,000, 40% received bonuses of at least 50,000, and 20% received bonuses of at least 1,00,000. If 60 employees received bonuses of less than 10,000, how many employees received bonuses of at lest 50,000 but less than 1,00,000?

   (A) 80 (B) 50 (C) 48 (D) 40

3. A sum of money compounded annually amounts to thrice itself in 10 years. In how many years, will it become 9 times itself?

   (A) 6 (B) 8 (C) 10 (D) 12

4. Babita was asked to calculate the arithmetic mean of ten positivetwo digit integers. By mistake, she interchanged the two digits, say t and u, in one of these ten integers. As a result, her answer for the arithmetic mean was 1.8 more than what it should have been. Then u - t equals

   (A) 1 (B) 2 (C) 3 (D) 4

5. Operating alone, Tap A takes twice as long as Tap B takes to fill an empty tank. Operating together at their respective constant rates, the taps can fill the tank in 6 hours. How many hours would it take the Tap A to fill the tank operating alone?

   (A) 18 (B) 9 (C) 12 (D) 15

6. A shopkeeper sells two items at the price of Rs.160. If one of them is sold at 10% profit and another sold at 10% loss, then find the profit/loss?

   (A) 3.23 (B) 5.75 (C) 2.5 (D) 6.9

7. The sum of ages of 5 children born at interval of 3 years each is 50 years. What is the age of youngest child?

   (A) 10 (B) 2 (C) 7 (D) 4

8. The cost of the components x, y, z of a machine worth Rs.45,000 in 1996 is given as a pie chart ? In the following year, the cost of the components x, y, z increased by 10%, 30%, and 20% respectively. What is the cost of the machine in 1997?

   (A) 54375

   (B) 52375

   (C) 54475

   (D) 54365

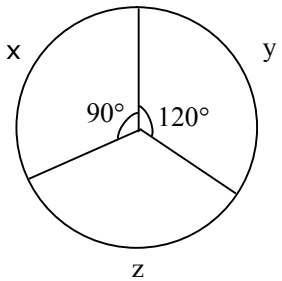

9. What is the 2777th digit in the sequence 1 2 3 4 5 6 7 8 9 10 11 12 13 14…..?
(A) 9 (B) 3 (C) 7 (D) 6

10. Production of sugar (in thousand tons) by three sugar mills over the year

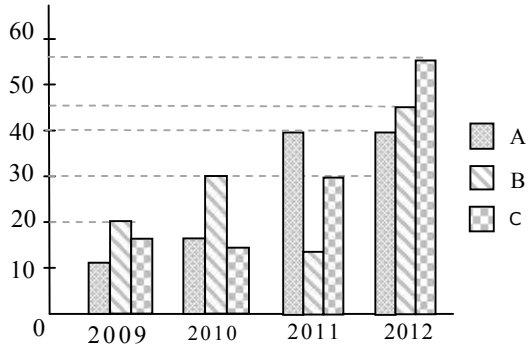

Which of the statement is true?
i. Ratio between the production of B in 2011 to C in 2012 is 3 :11
ii. Average production of A in four years is 20
iii. Percentage increase in C in 2011 from the previous year is 100%
(A) i & ii only (B) ii & iii only
(C) i & iii only (D) i, ii & iii

11. "Students who hired a hack to write their projects were punished"
Choose the best assumption for the given statement:
(A) Students have become mischievous
(B) Hack's are intelligent
(C) Hiring a hack is inexpensive
(D) Students have projects to be done

12. Find out the error part in the given sentence
Rajesh is/ smarter enough/ to get selected for his post/ without any recommendations
(A) (B) (C) (D)

13. Arrange the given parts of the sentence in correct order:
and recognize / all of us must / the machine tool industry / in the Country/
[1] [2] [3] [4]
strategic and vital / have a deep introspection / the fact that /
[5] [6] [7]
has a very special place / from the point / interests of the nation.
[8] [9] [10]
(A) 2,4,7,8,6,9,1,10,3,5 (B) 2,6,5,8,4,3,1,7,10,9
(C) 2,3,8,9,6,7,10,4,1,5 (D) 2,6,1,7,3,8,4,9,5,10

14. Choose the appropriate word which gives the meaning of the sentence given:
A critical situation in which no progress can be made:
(A) Hullabaloo (B) Aggression (C) Histrionic (D) impasse

15. There was once a newspaper vendor who had a rude customer. Every morning the customer throws the money at the vendor. The vendor would pick up the money, smile politely and say, "Thank you sir". The vendor's assistant asked him "why are you always polite with him when he is so rude to you". The vendor replied "He can't help being rude and I can't help being polite".
What is vendor's conclusion?
(A) Strive for excellence (B) Work is worship
(C) Rebels do not realize (D) Keep faith in our own ideas

16. In 1991, produce growers began using a new, inexpensive pesticide, provoking many objections that they would damage both the environment and the produce they were growing. However, the fears have proven unfounded as, though 1996, produce prices had dropped and no ill effects had been reported.
Which of the following, if true, would be the strongest objection to the argument above?
(A) Consumption of the produce declined from 1991 to 1993, but rose sharply from 1994 to 1996.
(B) Several areas in which use of the pesticide was forbidden have also experienced a drop in produce prices.
(C) The amount of produce grown in 1991 was larger than that of 1996.
(D) The time since the beginning of the use of the pesticide has been too short to allow
some of the predicted effects to occur.

17. Choose the appropriate antonym for the bold word **Linger**
(A) Sojourn (B) Fiery (C) Condone (D) Quilt

18. Find the proper meaning of the word given in bold letters
APP won the election **fair and square.**
(A) Honestly (B) Falsely (C) Corruptedly (D) Unexpectedly

19. None but the rich can afford air travel. Some of those who travel by air become sick. Some of those who become sick require treatment.
Choose the best conclusion:
(A) All the rich travel by air
(B) All the persons who travel by air become sick
(C) All sick persons travel by air
(D) Only rich can travel by air

20. **Sentence completion**
According to Maslow's theory of need hierarchy, material is the _____ demand of human beings, in that it provides the founding floor from which the other demands are generated.
(A) Essential (B) basic (C) final (D) emotional

Section-II: Technical

1. Which of the following is not required in concrete mix design?
   (A) Workability of concrete
   (B) Initial setting time of cement
   (C) Water – cement ratio
   (D) Maximum nominal size of aggregates

2. The following data relate to a bar subject to a tensile test:
   Diameter of the bar, d = 20 mm
   Tensile load, P = 50 kN
   Gauge length, l = 300 mm
   Extension of bar, δl = 0.114 mm
   Change in diameter, δd= 0.00345 mm.
   Calculate the value of Bulk modulus of elasticity.
   (A) 1.4×10^6 MPa (B) 2.2×10^6 MPa (C) 3.07×10^6 MPa (D) 5.4×10^5 MPa

3. What is the correct influence line diagram for shear force at point B of the beam shown in figure?

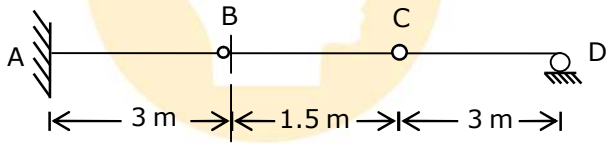

(A)

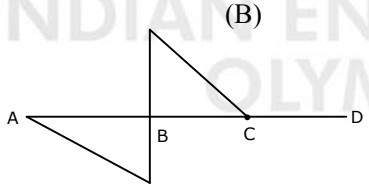

(B)

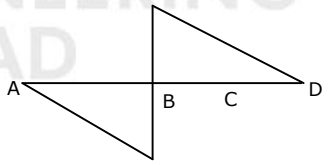

(C)

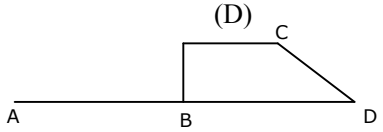

(D)

4. In the traverse ABCDA, if the bearing of AB is $120^O30'$ what will be the fore bearing of CD?

   (A) $300^o30'$

   (B) $210^o30'$

   (C) $30^o30'$

   (D) $15^o30'$

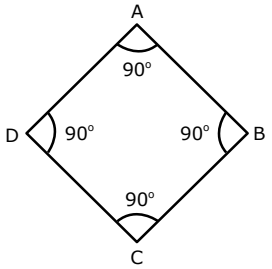

5. A bag contains 3 green and 2 red balls. A man draws 2 balls at random from the bag. If he is to receive 20paise for every green ball he draws and 10paise for every red one, what is his expectation (in paisa)?
(A) 32 (B) 42 (C) 52 (D) 65

6. A rectangular plate 80 cm long and 20 cm wide is dragged beneath weir in a stream having velocity of 5 m/s. $\left(\gamma = 12\ \text{N/m}^3,\ \nu = 1.5\times10^{-5}\,\text{m}^2/\text{s}\right)$. The drag on both sides of plate is
(A) 1.38×10^{-2} N (B) 0.69×10^{-2} N (C) 2.76×10^{-2} N (D) 1.5×10^{-2} N

7. Consider a horizontal rigid beam ABC, hinged at A and supported by bar at B. $\left(E = 2\times10^5\ \text{MPa}\right)$.

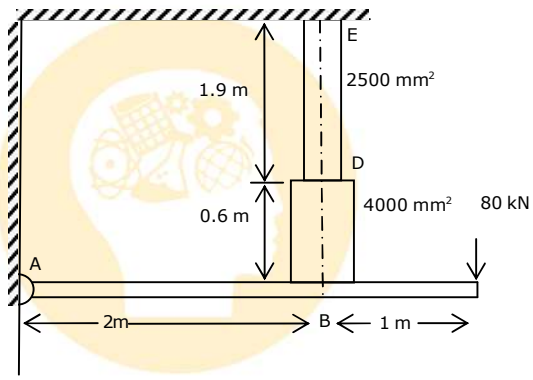

The total elongation of the rod will be
(A) 0.452mm (B) 0.546mm (C) 0.623mm (D) 0.42mm

8. What is the vertical displacement of joint 'C' of the frame shown below?

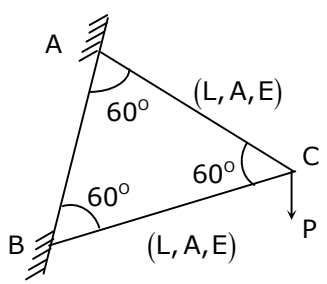

(A) $\frac{PL}{AE}$ (B) $\frac{2PL}{AE}$ (C) $\frac{PL}{2AE}$ (D) $\frac{3PL}{AE}$

9. A rectangular channel of base width 5m is carrying water at a rate of $20\ \text{m}^3/\text{s}$ with flow depth of 2m. The maximum height of jump to produce critical depth will be
(A) 0.362m (B) 0.525m (C) 0.434m (D) 0.573m

10. The length of a line measured on slope of 12° was recorded as 420m but it was found that chain of 20 m was 0.04m too long. The true horizontal distance of line is

(A) 408.72 m (B) 411.64m (C) 413.26m (D) 416.46m

11. If $f = x^n + y^n + z^n$, then $\nabla f \cdot r =$

(A) nf (B) f (C) n (D) 0

12. Consider following statements regarding timber.

(i) Strength of timber is maximum when load applied is perpendicular to grain
(ii) Timber as a natural material is Anisotropic
(iii) The moisture content in structure timber should be 10 to 20%

Correct statements are:

(A) (i), (ii) only (B) (ii), (iii) only
(C) (i), (iii) only (D) All

13. Consider the following statements: In the bar chart planning

1. Interdependence of the operations cannot be portrayed.
2. Progress of work can be measured.
3. Spare time of the activities can be determined.
4. Schedule cannot be updated.

Of these statements

(A) 1,2 and 3 are correct (B) 1 and 4 are correct
(C) 2, 3 and 4 are correct (D) 1,2 and 4 are correct

14. A parabolic three-pined arch of span 40m with a rise of 8m is hinged at the crown and springing. If it carries a horizontal load of 100KN / vertical meter on the left side as shown in the figure below, then the horizontal thrust at the right springing will be?

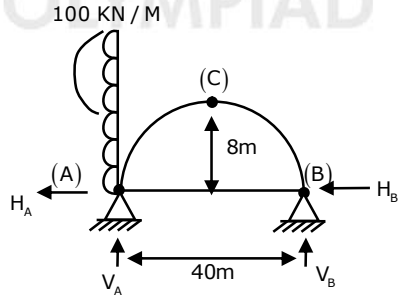

(A) 200kN (B) 400kN (C) 600kN (D) 800kN

15. If a hollow tube having external and internal diameter as 50 mm and 25 mm respectively with modulus of elasticity as $70000\ N/mm^2$ is pinned at its both ends, the safe load of the tube with a $FOS = 6$ and length $= 5m$ will be ?

(A) 1.4×10^3 N (B) 14×10^3 N (C) 0.14×10^3 N (D) 140×10^3 N

16. $\underset{x\to\infty}{\text{Lt}}\left[\dfrac{x^2+5x+3}{x^2+x+2}\right]^x =$

(A) e^4 (B) e^3 (C) e^2 (D) e

17. A rectangular stream 10m wide and 2m deep with bed slope of 1 in 5000 is carrying total discharge of $30\ m^3/s$. Assuming Chezy's constant as 60, the slope of free water surface will be?

(A) -2.68×10^{-4} (B) 2.68×10^{-4} (C) -4.37×10^{-4} (D) $+4.37\times10^{-4}$

18. A steel tape 20 m long standardized at $60°\ F$ with a pull of 20 kg was used for measuring a base line. Find the total correction per tape length in meters, if the temperature at the time of measurement was $70°\ F$ and the pull was 25 kg. Weight of 1 cubic cm of steel = 7.8 g, weight of tape = 0.6 kg and $E = 2\times10^6\ kg/cm^2$. Coefficient of expansion of tape per $1°\ F = 6\times10^{-6}$.

(A) 0.02 (B) 0.002 (C) 0.2 (D) 0.0002

19. A straight tunnel is to be run between two point A and B, whose co-ordinates are given in table as followed:

Point	Co-ordinate	
	N	E
A	0	0
B	2520	204
C	1534	1294

It is desired to shrink a shaft at D, the midpoint of AB, but it is impossible to measure along AB directly, so D is to be fixed from C.
Calculate the bearing of CD.

(A) $257°3^1$ (B) $287°3^1$ (C) $77°3^1$ (D) $107°3^1$

20. The quantity of cement required for 12 mm thick cement plastering 1:6 on 100 sq-m. new brick work is

A) 0.200 m^3 B) 0.247 m^3
C) 0.274 m^3 D) 0.300 m^3

21. A loaded pin jointed truss is shown below.
Force in member AC will be

(A) $10\sqrt{2}$ kN (Tensile)
(B) $10\sqrt{2}$ kN (Compressive)
(C) Zero
(D) 10 kN (Tensile)

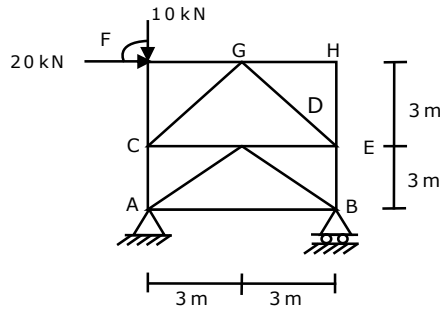

22. For the figure shown above, the coefficient of discharge of orifice is 0.8 and coefficient of velocity is 0.93. The diameter of orifice is 15cm. The discharge through orifice is

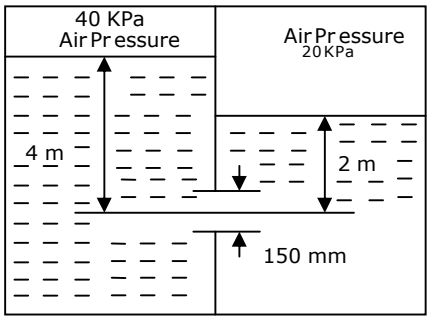

(A) $0.09\ m^3/s$

(B) $0.154\ m^3/s$

(C) $0.126\ m^3/s$

(D) $0.063\ m^3/s$

23. $\oint_c (xy + y^2)dx + x^2dy =$ _____ where C is the closed curve of the region bounded by y=x and $y=x^2$

(A) 1/20 (B) -1/20 (C) 1/40 (D) -1/40

24. Distance of point of contra flexure for the beam shown (from D) is

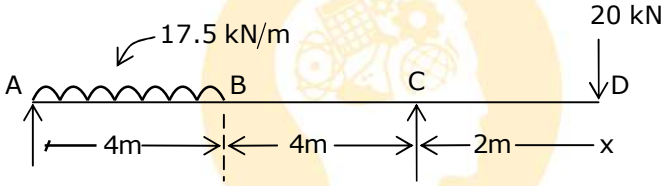

(A) 6 m (B) 3.78 m (C) 2 m (D) Never exists

25. The solution for contour integral $\oint_{|z|=1} e^{1/z} \sin\frac{1}{z} dz$ is

(A) $2\pi i$ (B) πi (C) 0 (D) $5\pi i$

26. A 4H.P. motor shown in figure delivers 3 H.P. and 1 H.P respectively to gear B and C. The angular speed of shaft is 900 rpm.

$G = 75\ KN/mm^2$ and diameter of shaft is 200 mm

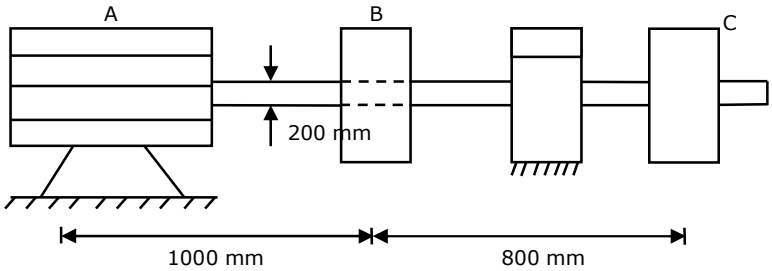

Maximum shear stress in steel shaft is?

(A) $8.61\times10^{-3}\ N/mm^2$ (B) $12.56\times10^{-3}\ N/mm^2$

(C) $16.42\times10^{-3}\ N/mm^2$ (D) $20.15\times10^{-3}\ N/mm^2$

27. The velocity distribution for the flow of a Newtonian fluid between two wide, parallel plates shown below is given by the equation $u = \frac{3V}{2}\left[1-\left(\frac{y}{n}\right)^2\right]$ where 'V' is the mean velocity and the fluid has a viscosity of $0.04\frac{N-s}{m^2}$.

When $V = 2m/s$ and h= 0.2 m,
Determine the shearing stress acting on the bottom wall.

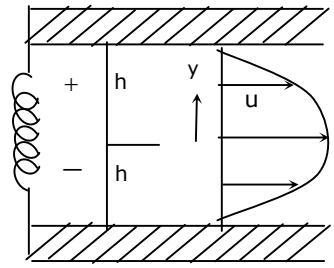

(A) $1.2\ N/m^2$ (B) $1.35\ N/m^2$

(C) $1.45\ N/m^2$ (D) $1.03\ N/m^2$

28. Reciprocal leveling was conducted across a wide river to determine the difference in level of points A and B. Point A is situated on one bank of river and B situated on the other. The following results on the staff held vertically at A and B from level stations 1 and 2 respectively were obtained. The level station 1 is near to A and station 2 was near to B.

Instrument at	Staff readings	
	A	B
1	1.485	1.725
2	1.190	1.415

If the reduced level of B is 55.18m above the datum, then the reduced level of A will be
(A) 53.24m (B) 55.41m (C) 58.47m (D) 56.17m

29. If the expected time of completion of a project is 60 weeks with a standard deviation of 5 weeks, the probability of completing the projecting 50 weeks and 65 weeks respectively will be
(A) 2.3% and 84.1% (B) 97.7% and 84.1%
(C) 97.7 % and 15.9% (D) 15.9% and 97.7%

30. For the below case bending moment at 'X' will be

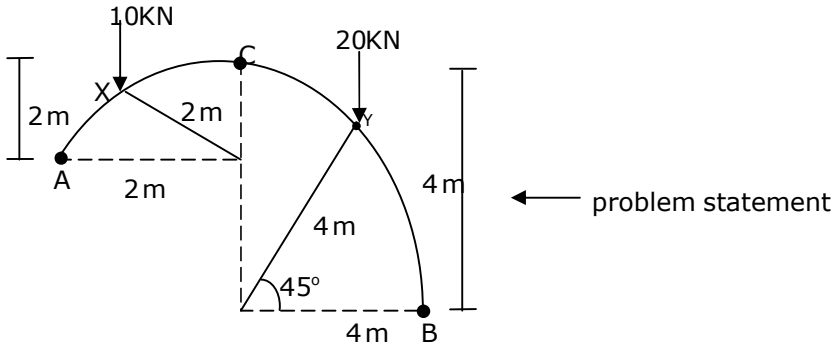

(A) 0.23kN-m (B) 0.49kN-m (C) 0.34kN-m (D) 0.42kN-m